BLIZ

Surface-mount doorway and hallway lights and post mount series. Fixtures consist of:

- Multi-step powder-coat painting process, optimized against UV rays and corrosion.
- Copper-free die-cast aluminum housing, ring, and faceplates.
- Copper-free aluminum extruded post.
- High transmittance, internally coated, pressed glass diffuser, thermally, and chemically quenched to strengthen the impact resistance and reduce the effect of rapid temperature changes.
- Custom molded, anti-aging gasket(s).
- Stainless steel external hardware.
- Custom MCPCB utilized to maximize heat dissipation and promote long LED life.
- Tiltable LED board mounting bracket allows for quick and easy installation.
- 100% uniform diffused light emission.
- Input voltage: 120-277 V (50 / 60 Hz), integral 0-10 V dimming driver.
- Five optional finishes available. Add finish suffix to any part number for textured Black (BK-81), Iron gray (AN-96), Aluminum metallic (GR-94), White (WH-87), Iron rust (RB-10) when not standard.
- Consult factory for dimming options, marine-grade, custom finishes (please specify RAL color), and non-cataloged CCT (Kelvin) options including static colors.
- Consult factory for custom signage options.
- Product meets Buy American Act requirements within ARRA.
- 5-year warranty on components.
- 10-year warranty on glass.
- Marine Grade finish.
- Suitable for Natatorium applications.

IP 65 | WET | LISTED | 0-10 V | RAL | IK 07 2 J

FINISHES

- **AN-96** / Iron gray / Textured
- **GR-94** / Aluminum metallic / Textured
- **BK-81** / Black / Textured
- **WH-87** / White / Textured
- **RB-10** / Iron rust / Textured

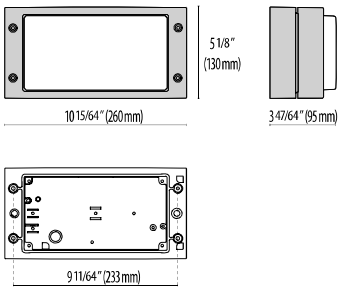

BLIZ

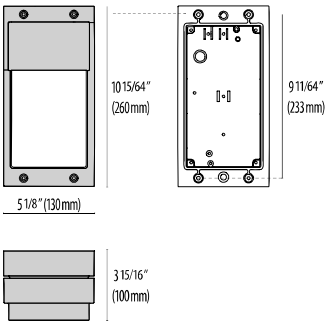

BLIZ
VISA/V

Lumen Output	2700K	3000K	3500K	4000K
BLIZ Open – 10W	486	498	509	520
BLIZ Open – 19.5W	972	995	1017	1040
BLIZ Guard – 10W	326	334	341	349
BLIZ Guard – 19.5W	652	667	682	698
BLIZ Visa – 10W	297	304	311	318
BLIZ Visa – 19.5W	593	607	621	635
BLIZ Visa V – 10W	320	327	335	342
BLIZ Visa V – 19.5W	639	654	669	684

Scan here for installation instructions

Revision 10
03/24

BLIZ

BLIZ GUARD

BLIZ VISA

BLIZ VISA V

Order Guide - Bliz

Order code example	BZ-O-AM-3K-120-NA-SIGN

BZ-						
Trim Style	**Wattage**	**Finish**	**Color Temperature**	**Voltage**	**Controls**	**Accessories**
O Open **G** Guard **V** Visa **VV** Visa Vertical	**10** 10 Watt (min) **19.5** 19.5 Watt (max) **XX** Specify Wattage Must be below max	**AM** Aluminum Metallic **IG** Iron Gray **IR** Iron Rust **BK** Textured Black **WH** Textured White **CC** Custom Color	**27K** 2700k **3K** 3000k **35K** 3500k **4K** 4000k **RED** Static Red **BLU** Static Blue **GRN** Static Green **AMB** Amber (turtle-friendly) **RGBW** RGBW* See below for control details	**UNV** 120-277V	**NA** Non Dimming **0-10V** 0-10V Dimming **ELV** ELV Dimming	**Sign** Logo/Signage **REM** Remote mounted Emergency battery back-up **TP** Tamper Proof hardware **P20** 20" Bollard **P40** 40" Bollard

Customised covers (with logos, letters, etc.) are available upon request.

REMOTE RGBW ACCESSORIES

Power Supply

17433
Kit driver 48V

17096
Kit driver 48V WP

RF Controls

3104173
RGBW RF controller 4 channel
(0.35A each CH)

31041730
RGBW RF controller WP 4 channel
(0.35A each CH)

310429
RGBW hand held remote

DMX Controls

178973
RGBW DMX enabler/decoder 4
channel (0.35A each CH)

1789730
RGBW DMX enabler/decoder WP 4
channel (0.35A each CH)

11015
Terminating Resistor

110150
Terminating Resistor WP